Dwight Look College of
ENGINEERING
TEXAS A&M UNIVERSITY

# SickSense
# Status Update

Team Number: 33

List of team members:

Jason Agnew, Josiah Faircloth

Samuel Ramos, Paavan Bagla

TA: Vishwam Raval

Sponsor: SICK

# Project Summary

## Problem statement:

- Farmers lack reliable, real-time insights into pollination activity. Existing methods are reactive, labor-intensive, and often inaccurate, leading to missed pollination deficits that directly reduce crop yield and quality.

AgriPollinate

## Our Solution:

- AgriPollinate is a Light Detection and Ranging (LiDAR)-powered monitoring system that continuously tracks pollinator activity and generates easy-to-read heatmaps.
- Farmers can access these heatmaps through a simple dashboard, allowing them to quickly identify under-pollinated areas, optimize hive placement, and improve crop yield and quality.

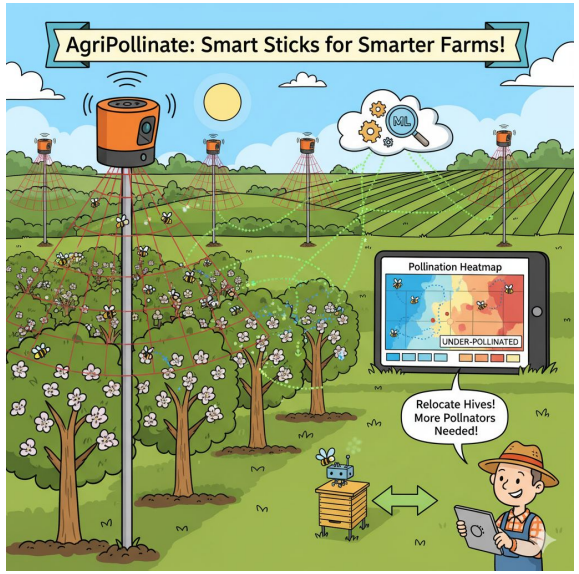

Dwight Look College of ENGINEERING TEXAS A&M UNIVERSITY

# System Overview

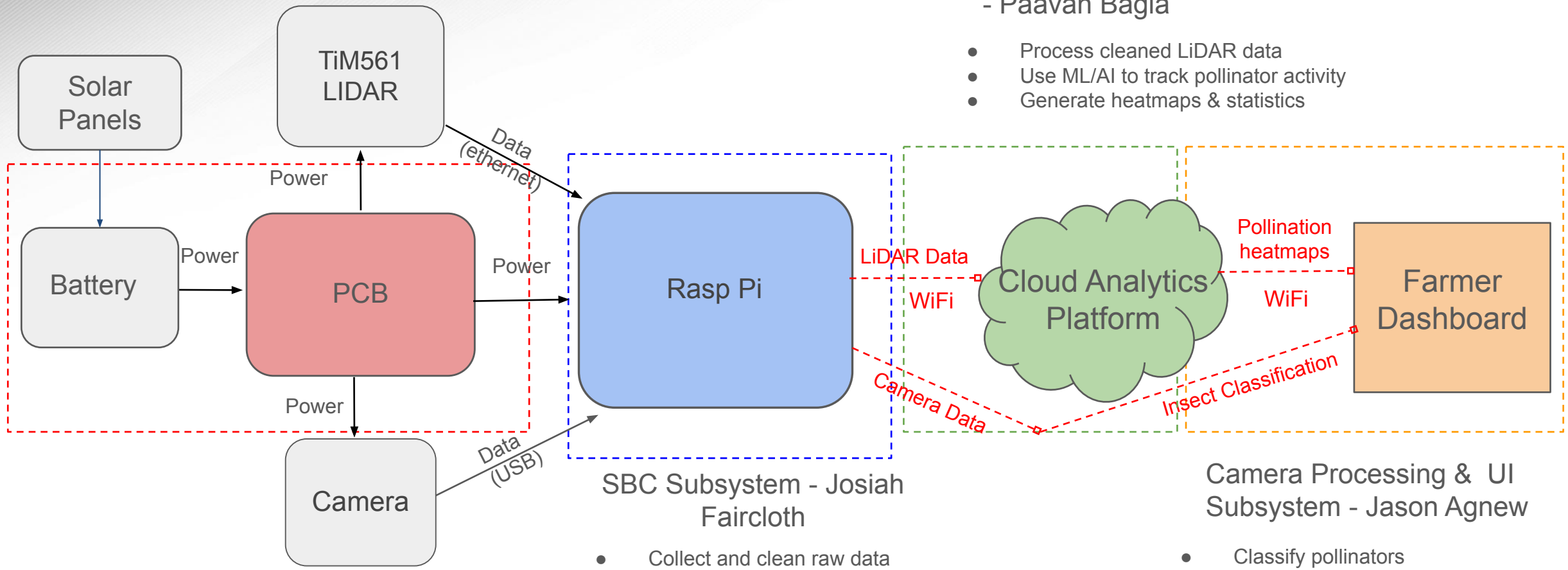


## LiDAR Processing Subsystem - Paavan Bagla

- Process cleaned LiDAR data
- Use ML/AI to track pollinator activity
- Generate heatmaps & statistics

## SBC Subsystem - Josiah Faircloth

- Collect and clean raw data
- Transmit cleaned data via WIFI

## Camera Processing & UI Subsystem - Jason Agnew

- Classify pollinators
- Deliver heatmaps & statistics to easily digestible user interface

## Power Subsystem - Samuel Ramos

- Supply power to physical components
- Charge Controller for the Solar Panel

# Solar Power Management Circuit

**Samuel Ramos**

| Accomplishments since midterm update<br>~20 hrs of effort | Ongoing progress/problems and plans until the next presentation |
|---|---|
| • Completed schematic of the Charge controller<br>• Completed schematic of step-down converter | • Finish PCB Design<br>• Routing/Spacing<br>• Testing |

Designed: The schematic and PCB for the Charge Controller & Step-down converter.
Built: The schematic in Altium for said components, currently building the PCB
Tested: The schematic in Altium, where it passed the Validation check

# Charge Controller

Samuel Ramos

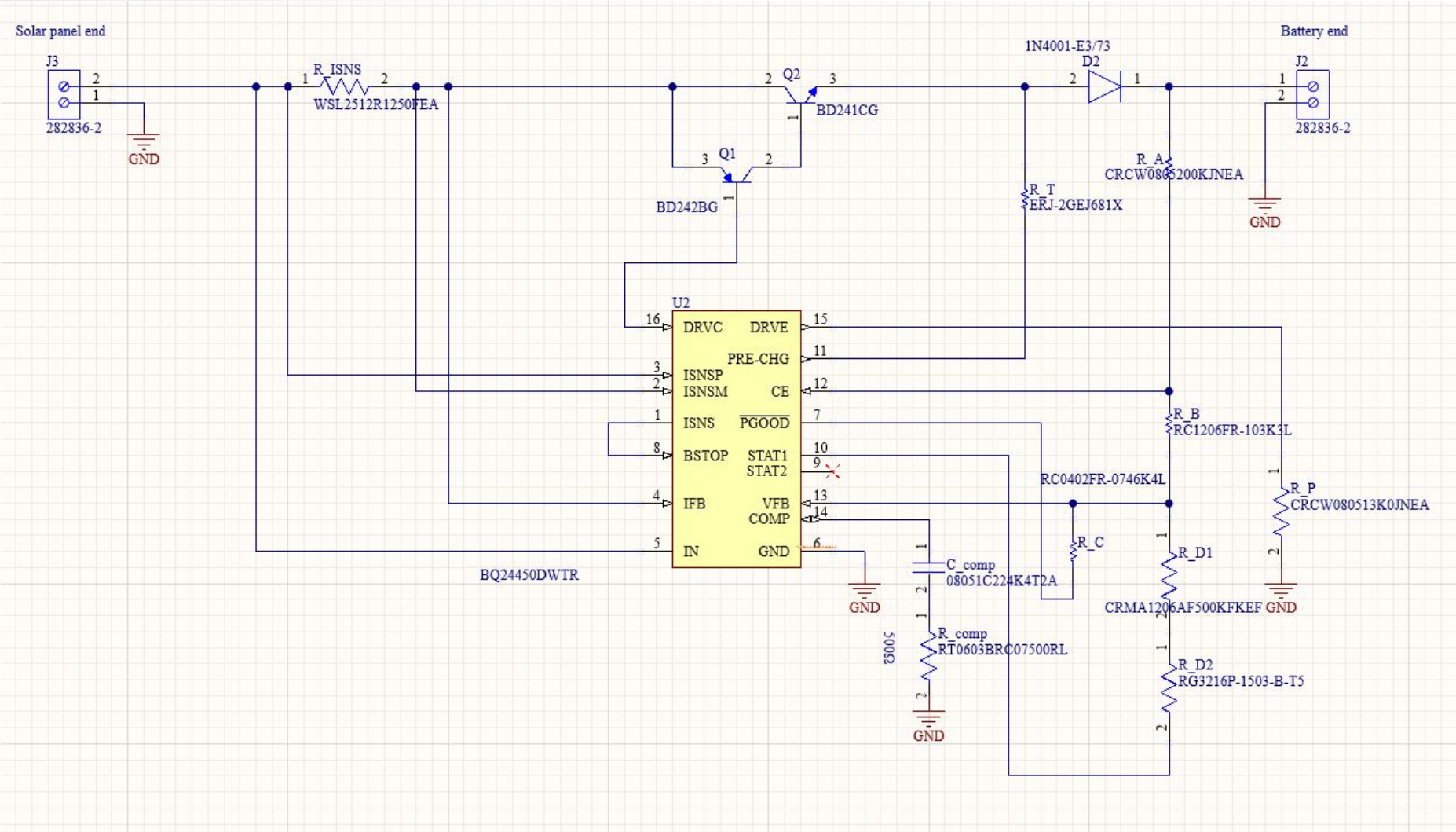

# Buck Converter

Samuel Ramos

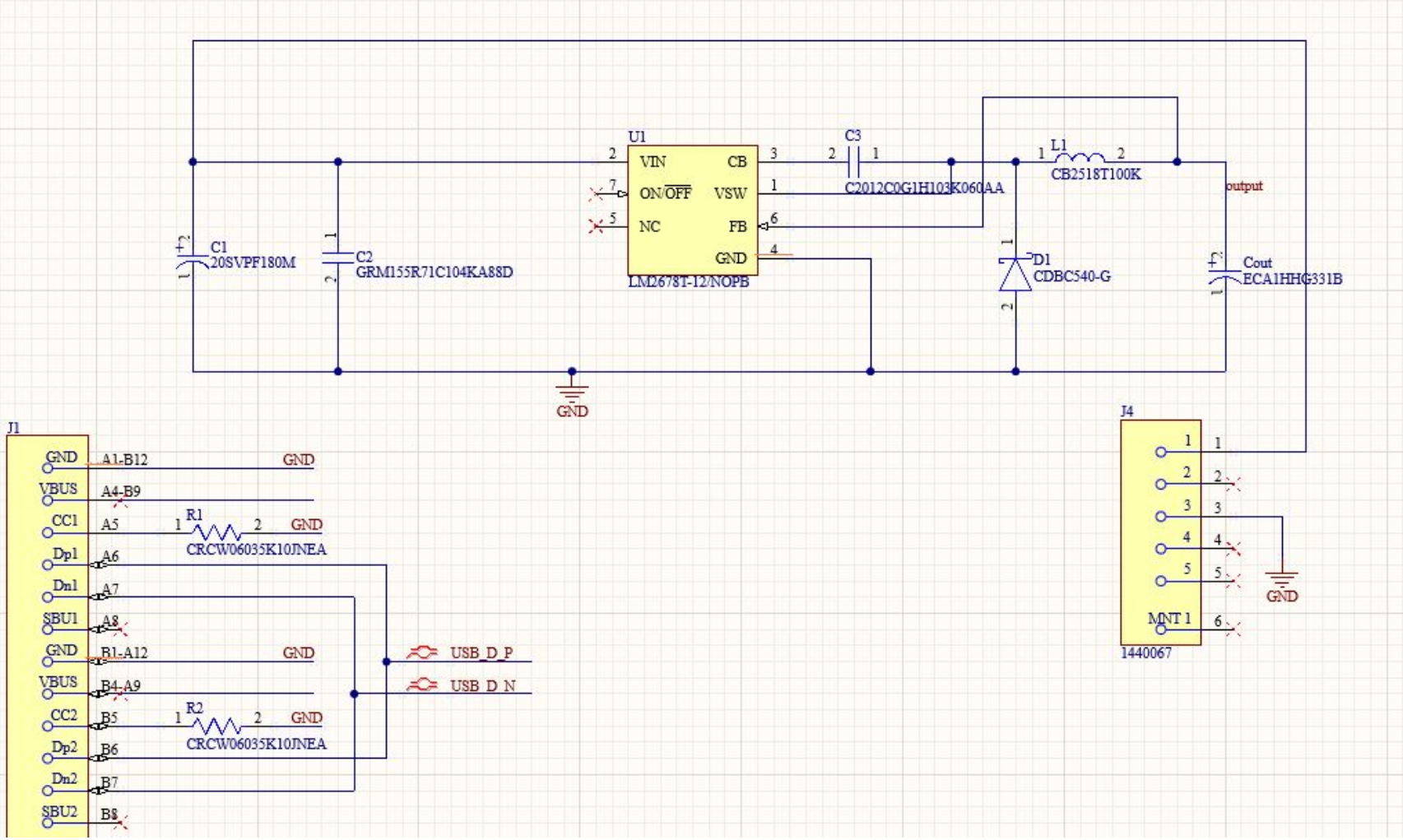

# Single Board Computer (SBC) Subsystem

**Josiah Faircloth**

| Accomplishments since midterm update<br>24 hrs of effort | Ongoing progress/problems and plans until the next presentation |
|---|---|
| • Acquired SBC, LiDAR, and camera, Installed OS and established remote access.<br>• Interfaced camera module with SBC, Developed a script to capture image bursts on trigger, and transmit via Transmission Control Protocol (TCP). | • Currently Interfacing LiDAR, developing script to parse data stream.<br>• Will Develop software to filter raw LiDAR data, detect potential objects, and transmit data via TCP<br>• Will Integrate LiDAR processing, camera capture, and TCP |

# SBC Subsystem

**Josiah Faircloth**

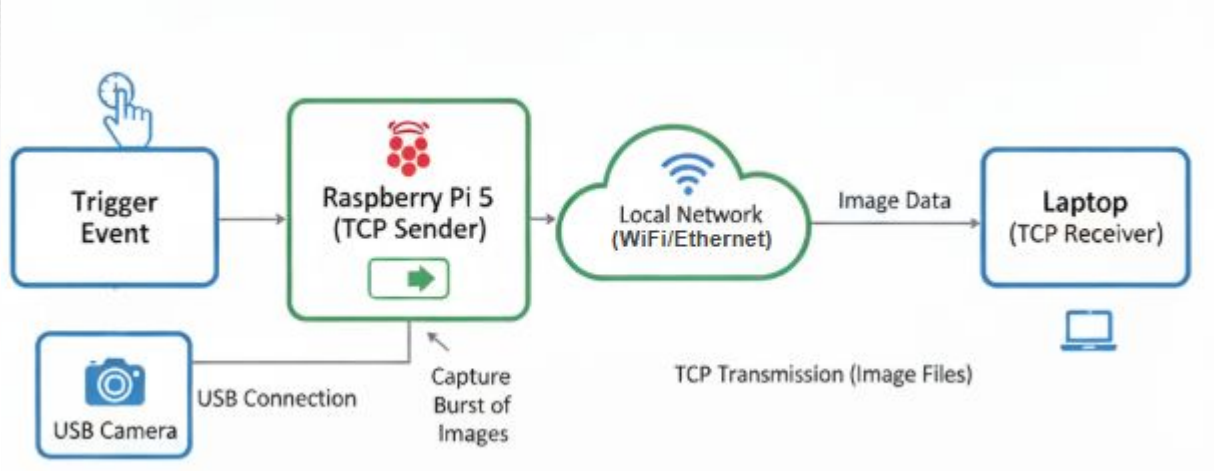


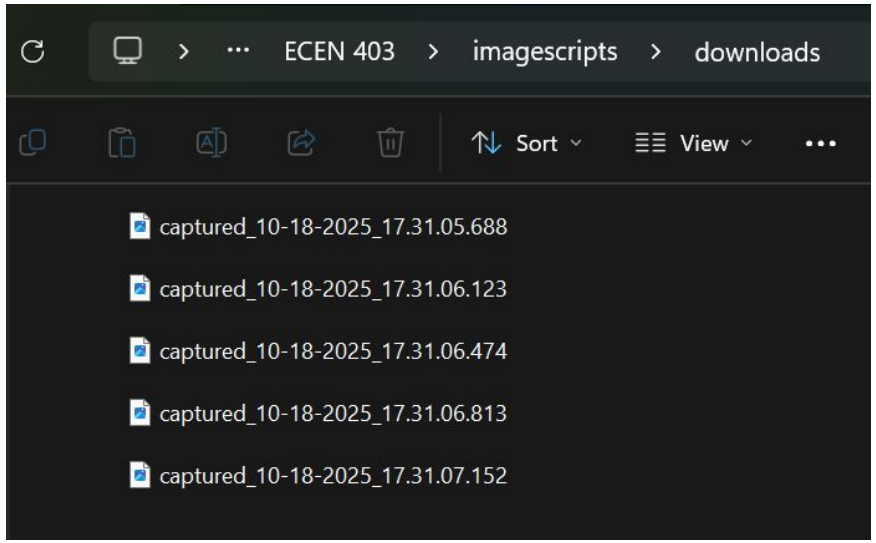


**Designed:** Python server & client scripts for TCP, Python Script for image capture

**Built:** SBC, camera module, SSH connection

**Tested:** SSH connection, development environment, Image capture latency

# LiDAR Data Processing & Pollination Heatmaps System

**Paavan Bagla**

| Accomplishments since midterm update<br>30 hrs of effort | Ongoing progress/problems and plans until the next presentation |
|---|---|
| • Developed a **LiDAR-camera simulation and calibration system** that converts simulated bee detections from LiDAR coordinates into 2D image frame coordinates, then **verified calibration accuracy (~85%)** by re-projecting back to LiDAR space.<br>• Built a **Gazebo-based farm simulation** with a vertical pole and mounted LiDAR sensor to replicate **realistic scanning and bee detection** environments. | • **Refine** calibration parameters to **increase projection accuracy** beyond 90% and improve noise filtering in LiDAR detections.<br>• **Develop** and test the full pipeline (simulation → processing → heatmap) using both **simulated and real LiDAR data** to evaluate pollination density accuracy |

# LiDAR-Camera Simulation and Calibration

**Paavan Bagla**

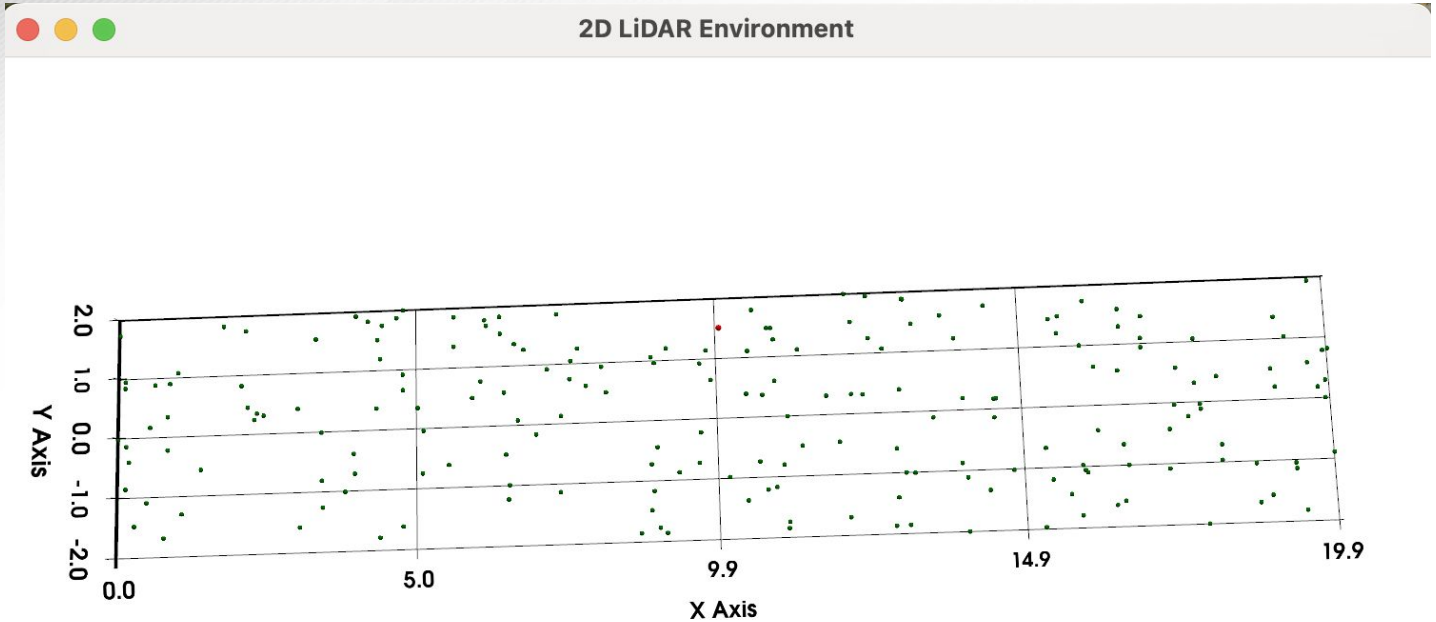


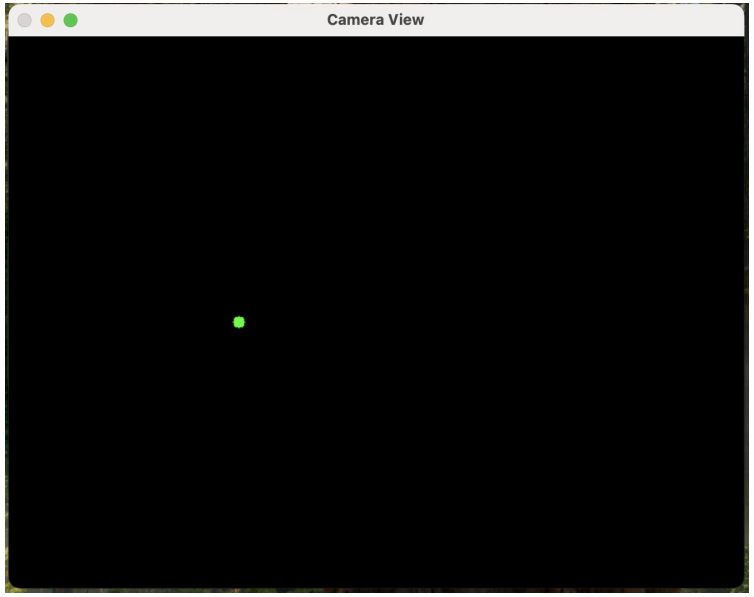


```
(capstone_env) (base) paavanbagla@Paavans-MacBook-Air LiDAR-Data-Processing-Subsystem % cd lidar_camera_sim
(capstone_env) (base) paavanbagla@Paavans-MacBook-Air lidar_camera_sim % python backproject_to_lidar.py
Press 'q' to close the window.
Ground truth LiDAR: [10.   1.5  0. ]
Pixel coordinates: [200. 248.]
Depth (camera Z): 10.0
Recovered LiDAR: [10.   1.5  0. ]
Euclidean error: 0.0
(capstone_env) (base) paavanbagla@Paavans-MacBook-Air lidar_camera_sim %
```

# Gazebo-based farm simulation

## Paavan Bagla

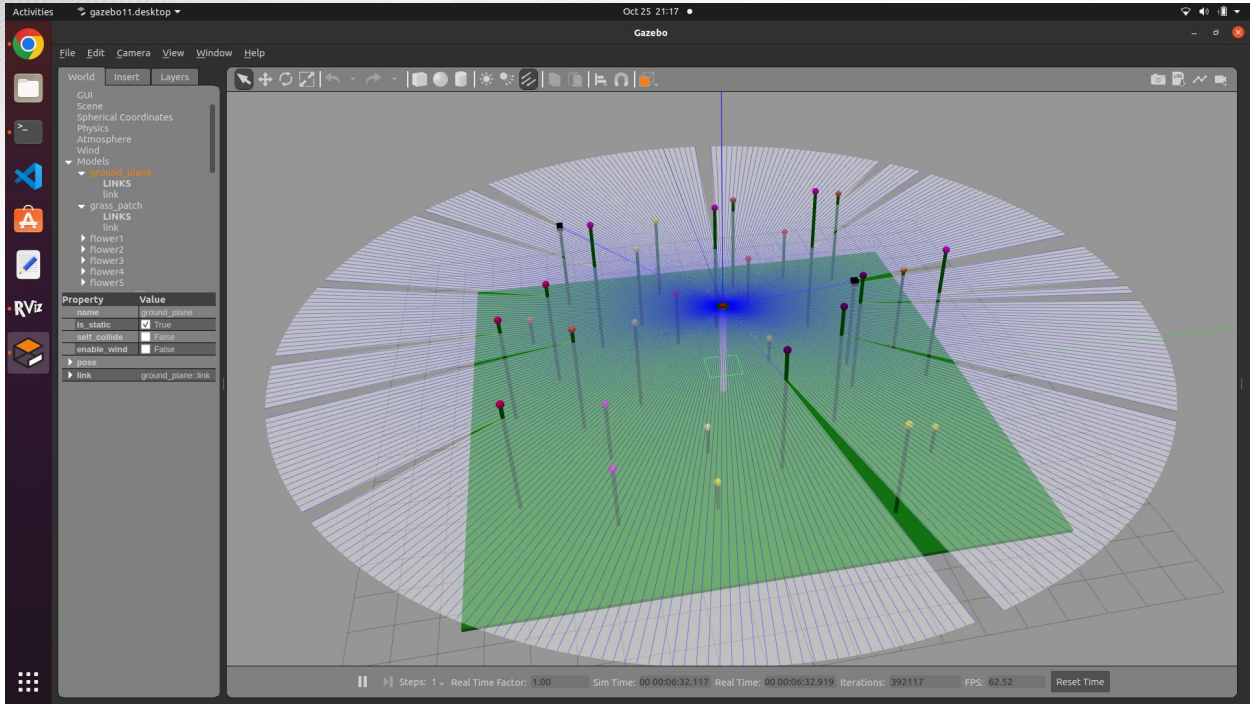


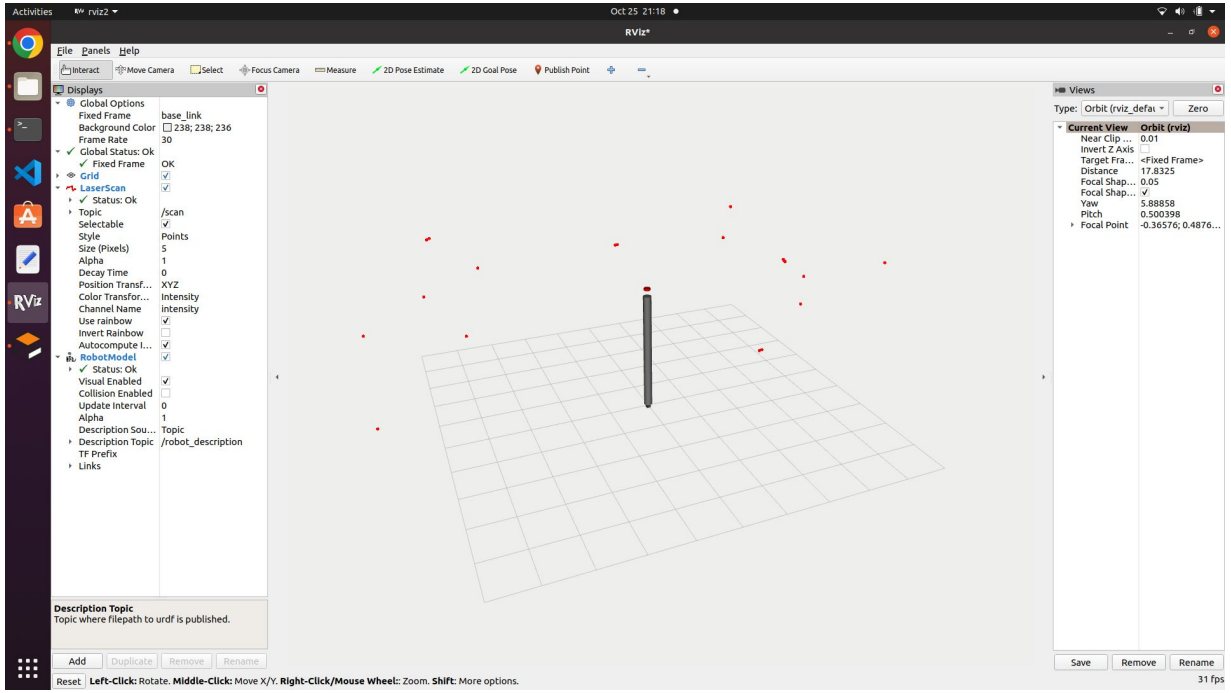


**Designed:** Coordinate transformation and farm simulation environment for LiDAR-camera calibration and bee trajectory modeling.

**Built:** ROS2-based LiDAR processing pipeline with simulation plugins and real-time data projection module.

**Tested:** Achieved ~85% calibration accuracy and validated realistic LiDAR returns from moving bee simulations.

# Camera Processing & UI Subsystem

**Jason Agnew**

| Accomplishments since midterm update<br>25 hrs of effort | Ongoing progress/problems and plans until the next presentation |
|---|---|
| • Designed and implemented a farmer dashboard layout with an intuitive user interface.<br>• Enabled real-time data updates in the dashboard through a simulated update button, allowing users to experience live changes.<br>• Developed a basic web page featuring image classification capabilities, leveraging a pre-trained MobileNet model with TensorFlow.js for in-browser predictions. | • Enable photo transmission from the Raspberry Pi by converting TCP protocol data to an HTTP-compatible backend, allowing seamless integration with the farmer dashboard.<br>• Build a custom image classification model using annotated dataset, based on MobileNet architecture, to improve accuracy and support both species identification and pollinator/pest classification.<br>• Integrate the image selection and insect classification workflow from the basic web page into the dashboard, enabling users to select an image, classify the bee or other insect, and automatically update the dashboard charts with the new data. |

# Camera Processing & UI Subsystem

Jason Agnew

tailwindcss + +

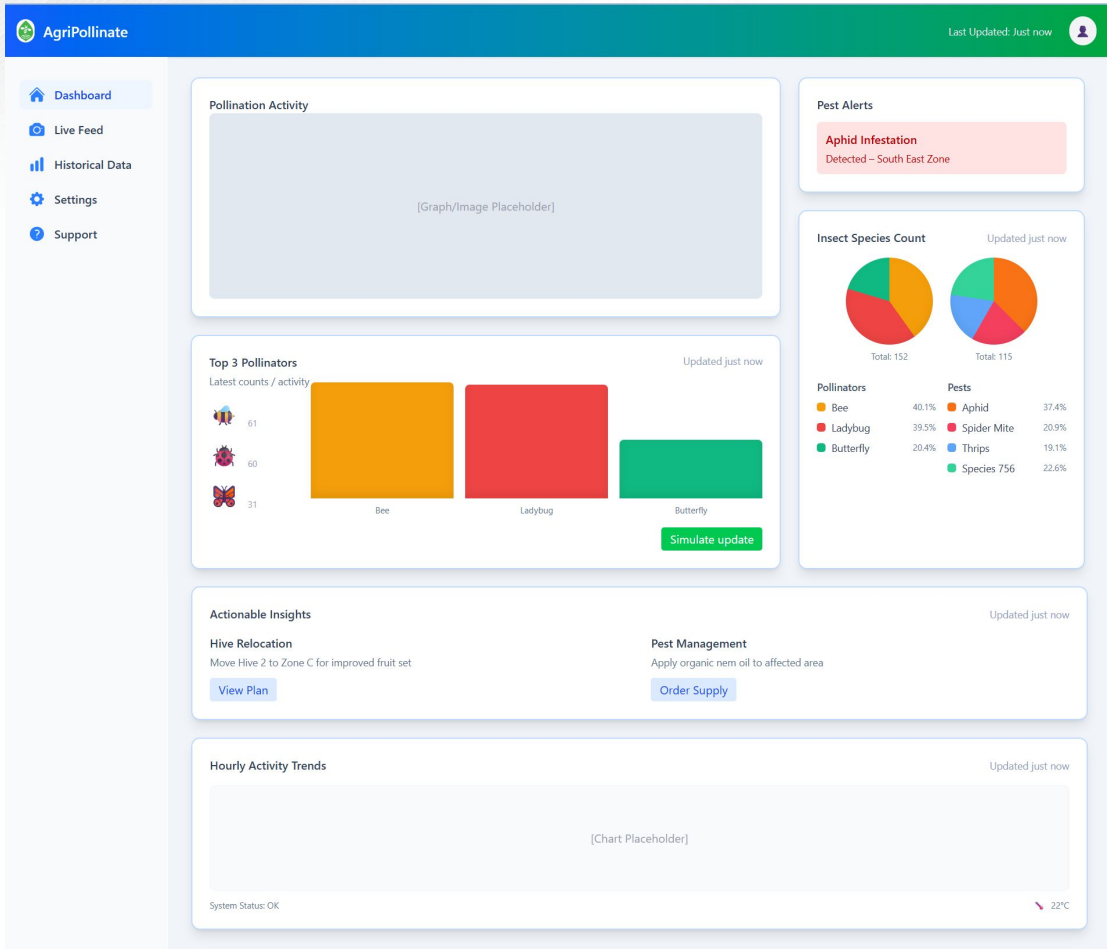


## Web Based Classification

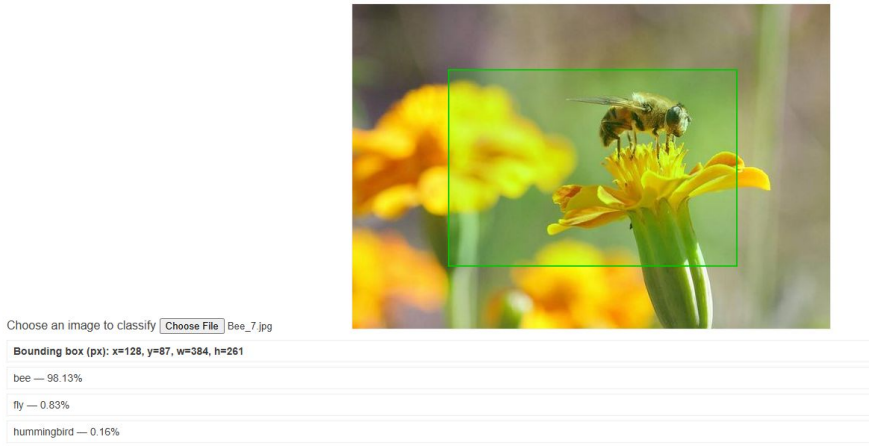


**Designed:** Designed a farmer dashboard interface and image classification web page.
**Built:** Built the dashboard with real-time data updates and implemented web-based image classification using TensorFlow.js.
**Tested:** Tested dashboard data updates and verified image classification predictions in the web page.

# Execution plan

| Milestone | Date | Owner | Status |
|---|---|---|---|
| Concept of Operations | 9/21/2025 | All | Complete |
| Midterm Presentation | 9/29/2025 | All | Complete |
| Familiarize myself with Altium, begin working on PCB design. | 9/30/2025 | Samuel | Complete |
| Research & Finalize SBC choice, Install needed libraries and development environments. | 9/30/2025 | Josiah | Complete |
| Literature review on LiDAR applications in pollinator monitoring.<br>Identified at least 3 LiDAR datasets for evaluation. | 9/30/2025 | Paavan | Complete |
| Finalize subsystem scope, set up repos for the dashboard and ML, and secure insect datasets. | 9/30/2025 | Jason | Complete |
| Functional System Requirements | 10/4/2025 | All | Complete |
| Interface Control Document | 10/4/2025 | All | Complete |
| Status Update 1 | 10/7/2025 | All | Complete |
| Continue working on schematic design | 10/7/2025 | Samuel | Complete |
| Procure SBC, LiDAR, camera, Install OS and establish remote access. | 10/7/2025 | Josiah | Complete |
| Select dataset (based on quality & resolution); Initial preprocessing scripts written (Python) for formatting LiDAR point clouds. | 10/7/2025 | Paavan | Complete |
| Complete initial Figma designs for the farmer dashboard and begin data annotation in Label Studio. | 10/7/2025 | Jason | Complete |
| Status Update 2 | 10/21/2025 | All | Complete |
| Finish schematic Design and begin PCB design | 10/21/2025 | Samuel | Complete |
| Interface camera module with SBC, Develop a script to capture images, Establish data pipeline to cloud. | 10/21/2025 | Josiah | Complete |
| ML environment set up (Python + TensorFlow).<br>Baseline model pipeline implemented and able to accept cleaned LiDAR data. | 10/21/2025 | Paavan | Complete |
| Train a baseline ML classifier, export it for TensorFlow.js, and create a dashboard component to display classification results with mocked data. | 10/21/2025 | Jason | In Progress |

| Milestone | Date | Owner | Status |
|---|---|---|---|
| Status Update 3 | 10/28/2025 | All | In Progress |
| Work on PCB designs, notably routing layout. | 10/28/2025 | Samuel | In Progress |
| Interface LiDAR by configuring IPs, Develop script to parse data stream. | 10/28/2025 | Josiah | In Progress |
| First round of model training completed.<br>Generate and visualize initial density maps from a small dataset subset. | 10/28/2025 | Paavan | In Progress |
| Refine the ML model with more training and preprocessing, and add visualization features like heatmaps and species counts. | 10/28/2025 | Jason | In Progress |
| Status Update 4 | 11/11/2025 | All | In Progress |
| Have hardware sent, see if any improvements can/should be made to existing PCB design | 11/11/2025 | Samuel | Planned |
| Develop software to filter raw LiDAR data, Implement ML model to distinguish potential insects from noise. | 11/11/2025 | Josiah | Planned |
| Model refinement, incorporate filtering for noise reduction.<br>Accuracy tested against validation subset; document metrics. | 11/11/2025 | Paavan | Planned |
| Simulate the image pipeline (as if from Raspberry Pi) and test dashboard latency for real-time updates. | 11/11/2025 | Jason | Planned |
| Status Update 5 | 11/25/2025 | All | Planned |
| Receive PCB, test system, and make revision notes. | 11/25/2025 | Samuel | Planned |
| Integrate LiDAR processing, camera capture, and cloud transmission, Implement watchdog timer. | 11/25/2025 | Josiah | Planned |
| Generate refined pollination density heatmaps from the dataset.<br>Document preliminary results and limitations (accuracy, clarity of heatmaps). | 11/25/2025 | Paavan | Planned |
| Integrate simulated LiDAR triggers for cross-validation and stress test the system with multiple events. | 11/25/2025 | Jason | Planned |
| Final Demo | 12/2/2025 | All | Planned |
| Prepare a report on PMIC status and proposed improvements. | 12/2/2025 | Samuel | Planned |
| Optimize code for efficiency, Prepare live demo of full functionality. | 12/2/2025 | Josiah | Planned |
| Deliver semester prototype: dataset-driven pollination heatmap (proof-of-concept).<br>Summarize dataset quality, model performance, and integration plan. | 12/2/2025 | Paavan | Planned |
| Deliver a full subsystem demo showing dataset → classification → visualization → alerts, and document setup for next year's real Pi integration. | 12/2/2025 | Jason | Planned |
| Final Presentation | 12/3/2025 | All | Planned |
| Final Report | 12/6/2025 | All | Planned |

# Validation plan

Validtion Plan

| Requirement / Objective | Validation Method | Metric / Target | Test Environment / Tool | Status | Owner |
|---|---|---|---|---|---|
| Verify LiDAR-to-Camera calibration accuracy | Compare re-projected 2D→3D points with original LiDAR coordinates | ≥ 95% projection accuracy | Python simulation (OpenCV + NumPy), Gazebo farm world | Achieved | Paavan |
| Validate LiDAR data processing pipeline | Test conversion, filtering, and clustering on simulated detections | < 10% false positives / frame | ROS2 node test on simulated LaserScan data | In Progress | Paavan |
| Confirm heatmap generation correctness | Compare heatmap density regions with known bee positions | ≥ 90% overlap with ground-truth regions | Python visualization module | In Progress | Paavan |
| Validate system robustness under noise | Introduce simulated sensor noise and assess system stability | < 15% degradation in accuracy | Gazebo with noise-enabled LiDAR plugin | Planned | Paavan |
| Test real-time performance with Raspberry Pi feed | Measure update rate and latency of processed LiDAR detections | ≤ 1s delay per frame | Live integration test (Raspberry Pi + ROS2) | Planned | Paavan |
| Verify PCB design to be ordered | Acctped Gerber and NC Drill files | 0 violations | Altium PCB Designer | In Progress | Samuel |
| PCB was correctly created & soldered | Visual Inspection | Matches Altium Design | Magnifiing glass | Planned | Samuel |
| Power On testing | Stable power on | Correct Voltage readings | Multimeter & Power source | Planned | Samuel |
| Test the fully completed circuit with load | Run load for 10 minuetes | Acceptable temp Range | Multimeter, Power source, heat gun | Planned | Samuel |
| Prepare SBC for remote software development | Connect to the SBC using an SSH client | >5 mins stable connection | Raspberry Pi 5, development laptop, local WiFi/Ethernet network, | Achieved | Josiah |
| Validate reaction latency | Python script recording start & capture times | avg latency <=400ms | Raspberry Pi 5, USB camera, Python environment | Achieved | Josiah |
| Confirm stable connection to LiDAR | Python script to connect to LiDAR and parse incoming data. | run for 5 mins w/o connection loss or parsing errors | Raspberry Pi 5, TiM561 LiDAR, Ethernet connection | In Progress | Josiah |
| Validate object detection | simulated pollinator in LiDAR's field of view in controlled environment | < 10% false positives / negatives | Raspberry Pi 5, TiM561 LiDAR, simulated pollinator | Planned | Josiah |
| Real-time Data Update Functionality | Simulate update testing; dashboard monitoring | Dashboard reflects live data after updat | Dashboard with simulated update button | Achieved | Jason |
| Web-based Image Classification Capability | Image prediction testing in browser | Images classified using pre-trained model | Web page with TensorFlow.js; sample images | Achieved | Jason |
| Initial Model Training | Model evaluation using test set; dashboard check | Accuracy ≥60%; dashboard shows test classifications | Model training environment; dashboard | In Progress | Jason |
| Intermediate Model Validation | Validation on simulated inputs; heatmap rendering | Accuracy ≥70%; heatmaps render correctly | Model validation environment; simulated inputs | Planned | Jason |
| Dashboard Responsiveness | Dashboard refresh test; alert simulation | Refresh ≤10s; simulated pest/pollinator alerts correct | Dashboard; alert simulation tool | Planned | Jason |
| Robustness Test | Sequential input testing | Accuracy ≥80%; no failures under sequential inputs | System with simulated sequential inputs | Planned | Jason |
| Final Validation and Documentation | Final model test; demo/documentation review | Accuracy ≥85%; documentation/demo completed | Final model; documentation/demo environment | Planned | Jason |

# Team 33 - AgriPollinate

**Team Members:**

- **Jason Agnew**
- **Josiah Faircloth**
- **Samuel Ramos**
- **Paavan Bagla**

**TA: Vishwam Raval**

**Sponsor: SICK**

Thank you everyone for your attention!
Feel free to ask any questions!